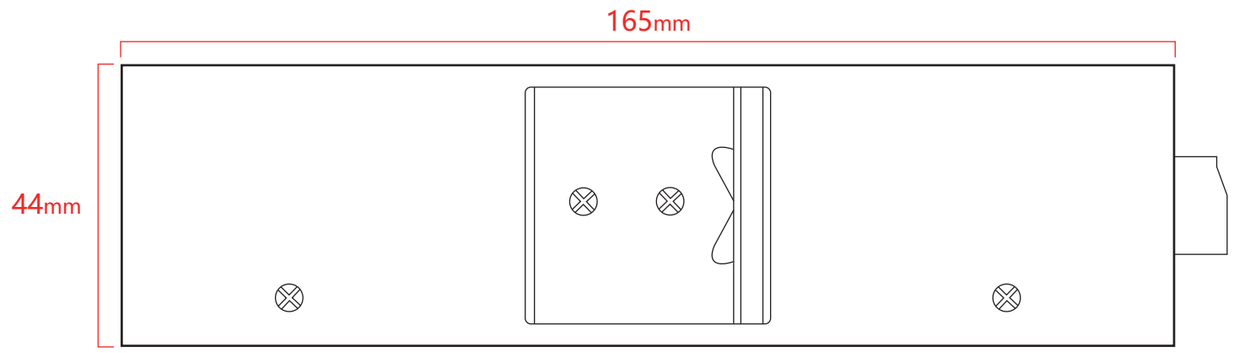
165mm
44mm

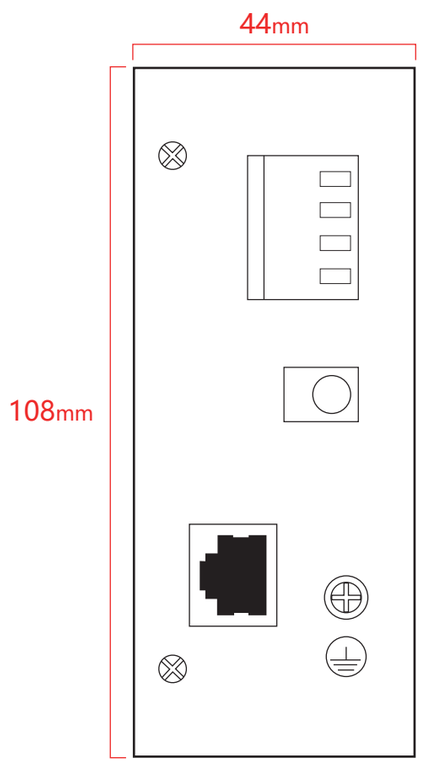
44mm
108mm

165mm
108mm

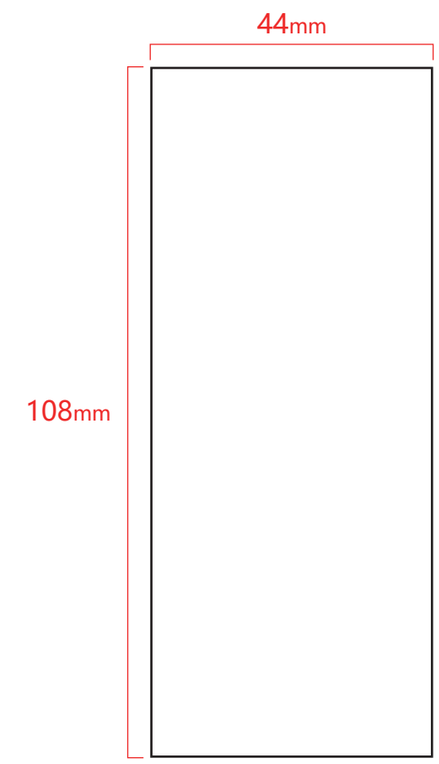
44mm
108mm

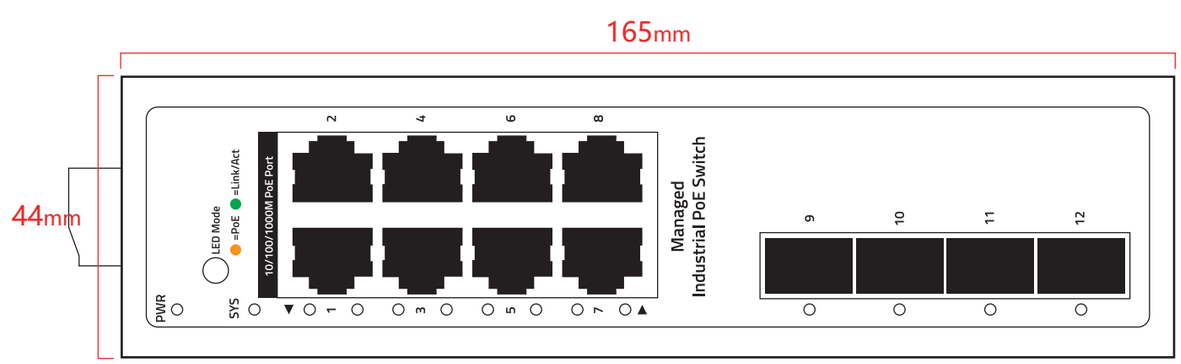
165mm
44mm
PWR
SYS
LED Mode
=PoE
=Link/Act
10/100/1000M PoE Port
1
2
3
4
5
6
7
8
Managed
Industrial PoE Switch
9
10
11
12